Base

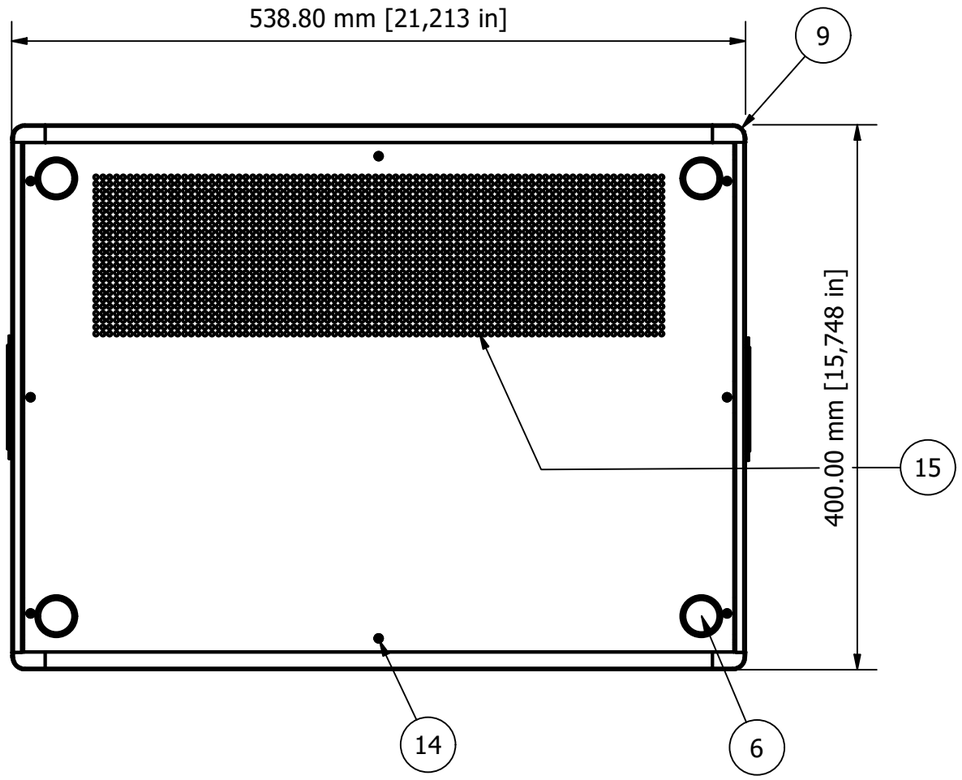

Detail A

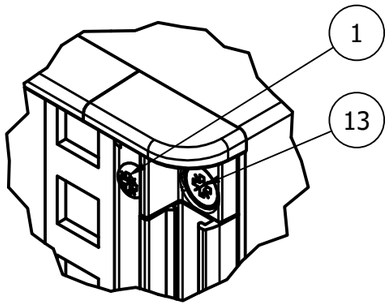

PARTS LIST			
ITEM	QTY	PART NUMBER	DESCRIPTION
1	12	M3x8mm Pan	19" Rack Bracket Screws
2	8	M6420000	Trim Clips
3	2	M6604100	Support Runners
4	6	M4x12mm Pan	Support Runner Screws
5	2	M6000040	Side Handles
6	4	M6420106	Technofeet
7	1	M6602005	Cover
8	1	M6603405	Rear Panel
9	2	M6600105	Bezel (Front + Rear)
10	4	M6604005	19" Rack Mount Brackets
11	4	M6600015	Trims (Front + Rear)
12	4	M5900016	19" Panel Screw Kit
13	8	M4x16 Screw	Bezel Screws
14	8	M3x6mm CSK	Base Panel Screws
15	1	M6603101	Base Panel
16	2	M6603015	Internal Chassis Plate

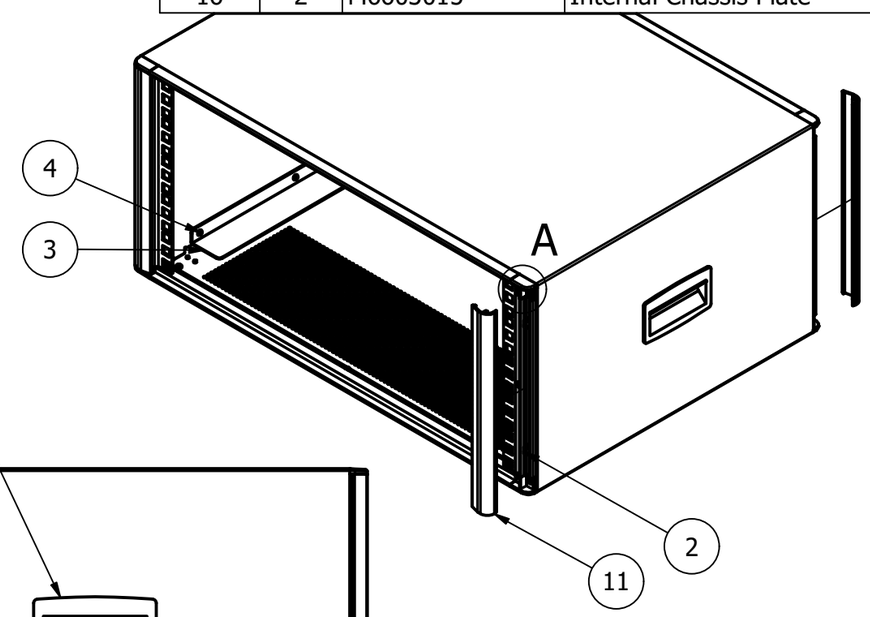

Front

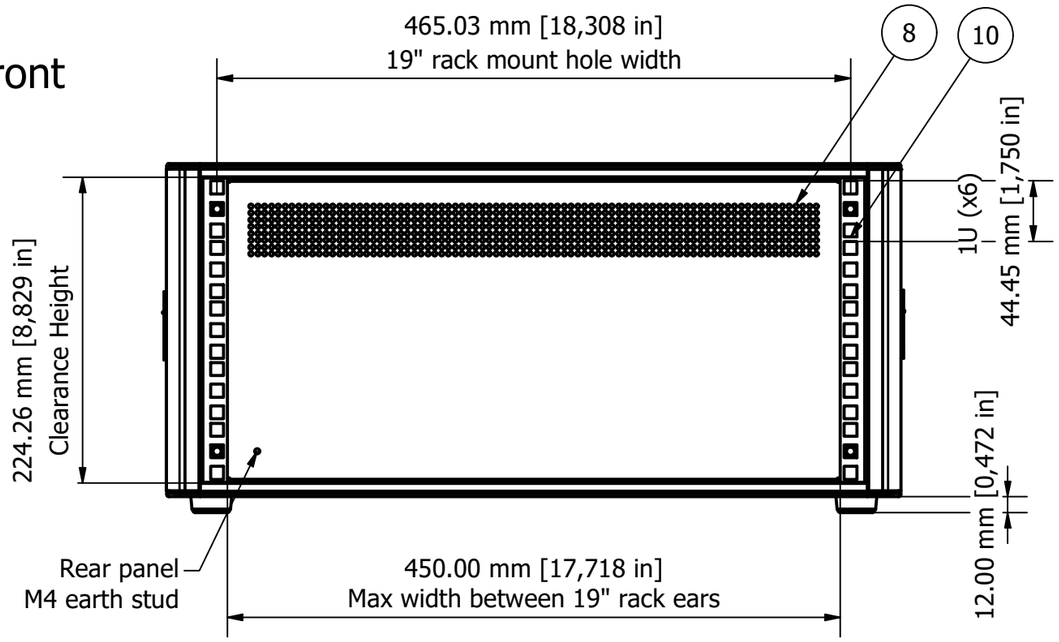

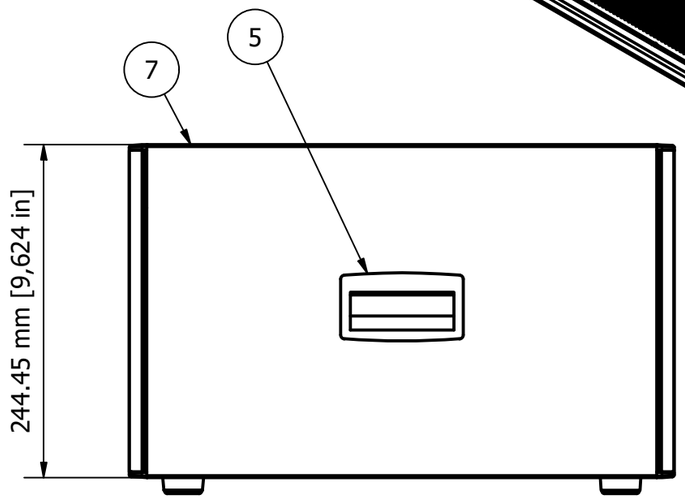

Side

FIRST ANGLE PROJECTION

Designed by	Description	Date	Scale
METCASE	Technomet 19" RC195 (5U x 540 x 400 mm)	20/08/2025	1:4.5

METCASE ENCLOSURES
15 Brunel Way, Segensworth East, Fareham,
Hampshire, PO15 5TX, UK.
Tel: +44 (0)1489 583858 Email: sales@metcase.co.uk

METCASE www.metcase.com

Part Number	Issue	Sheet
M6619546	1	1 / 2

© OKW Enclosures Ltd (Date as shown). This drawing contains proprietary information of OKW Enclosures Ltd and is tendered subject to the following conditions. The information be retained in confidence, not be reproduced or copied, and not be used or incorporated in any product, unless permission is obtained in writing from OKW Enclosures Ltd.

Rear

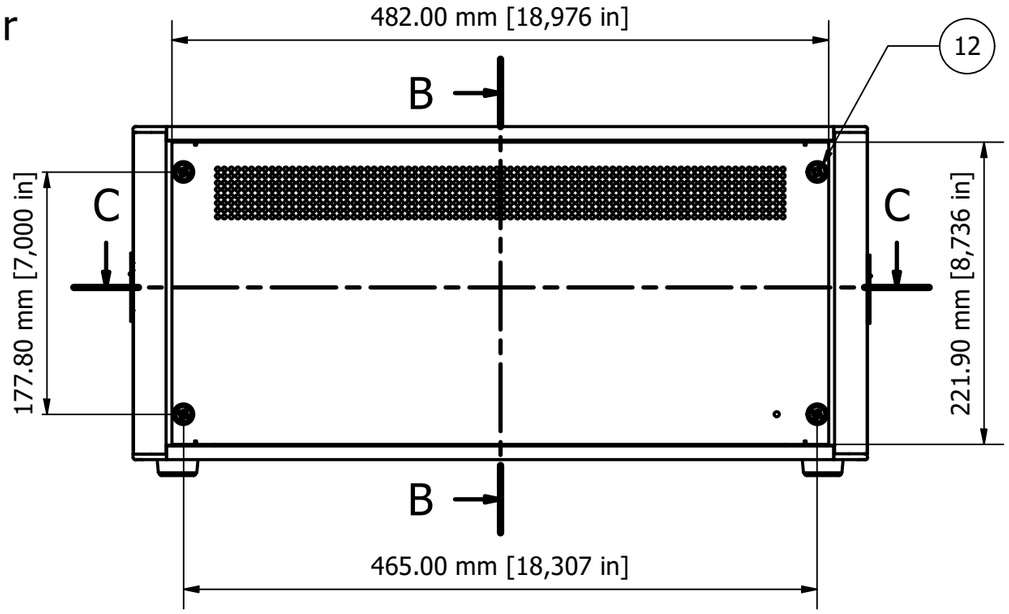

B-B

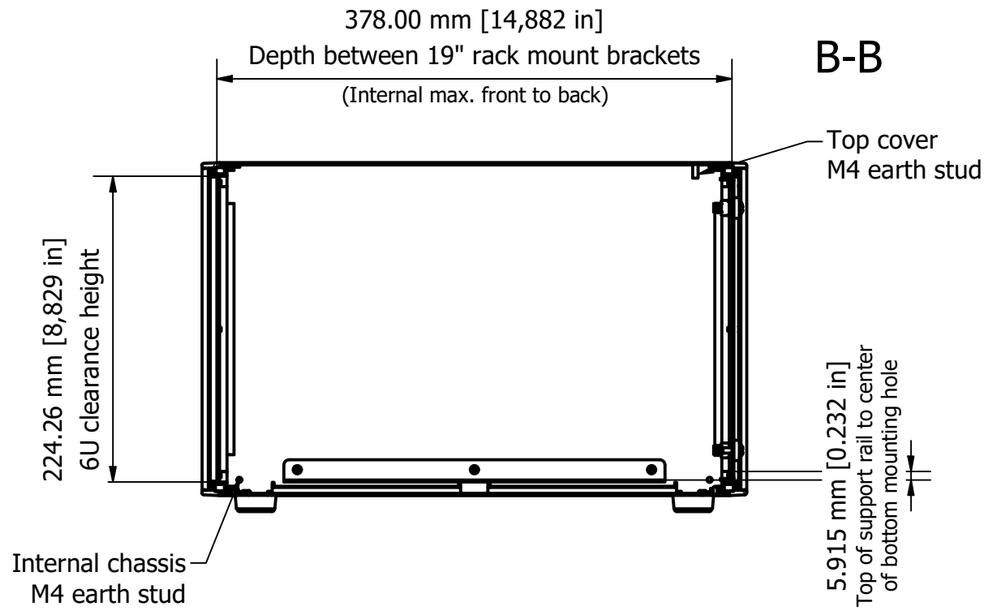

C-C

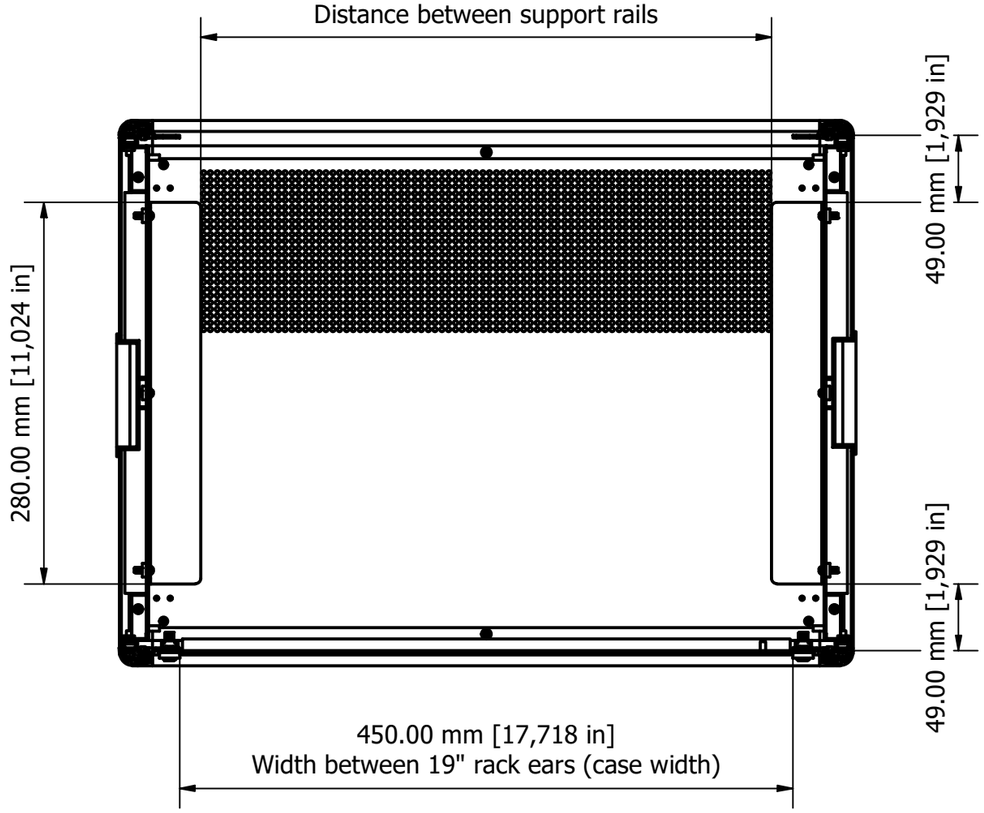

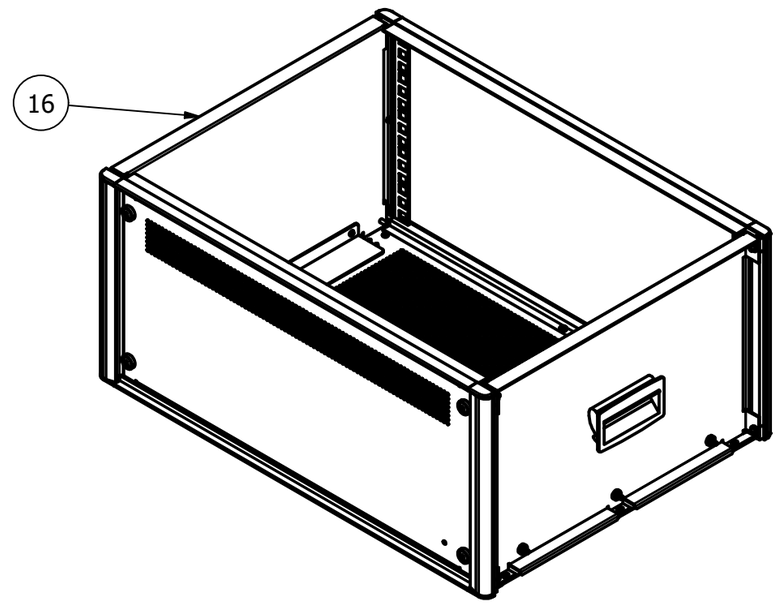

Notes:

1) Case is fabricated from 1.5 mm aluminium sheet with die cast and extrusion bezels.
2) Case is powder coat painted fine texture traffic white/traffic grey A RAL 9016/7042.
3) All parts have an M4 stud for earthing.
4) Supplied with 4 colour matching Technofeet.
5) 19" rack brackets are fitted to the front and back.

FIRST ANGLE PROJECTION

Designed by	Description	Date	Scale
METCASE	Technomet 19" RC195 (5U x 540 x 400 mm)	20/08/2025	1:4.5

METCASE ENCLOSURES
15 Brunel Way, Segensworth East, Fareham,
Hampshire, PO15 5TX, UK.
Tel: +44 (0)1489 583858 Email: sales@metcase.co.uk

METcase www.metcase.com

Part Number	Issue	Sheet
M6619546	1	2 / 2

© OKW Enclosures Ltd (Date as shown). This drawing contains proprietary information of OKW Enclosures Ltd and is tendered subject to the following conditions. The information be retained in confidence, not be reproduced or copied, and not be used or incorporated in any product, unless permission is obtained in writing from OKW Enclosures Ltd.