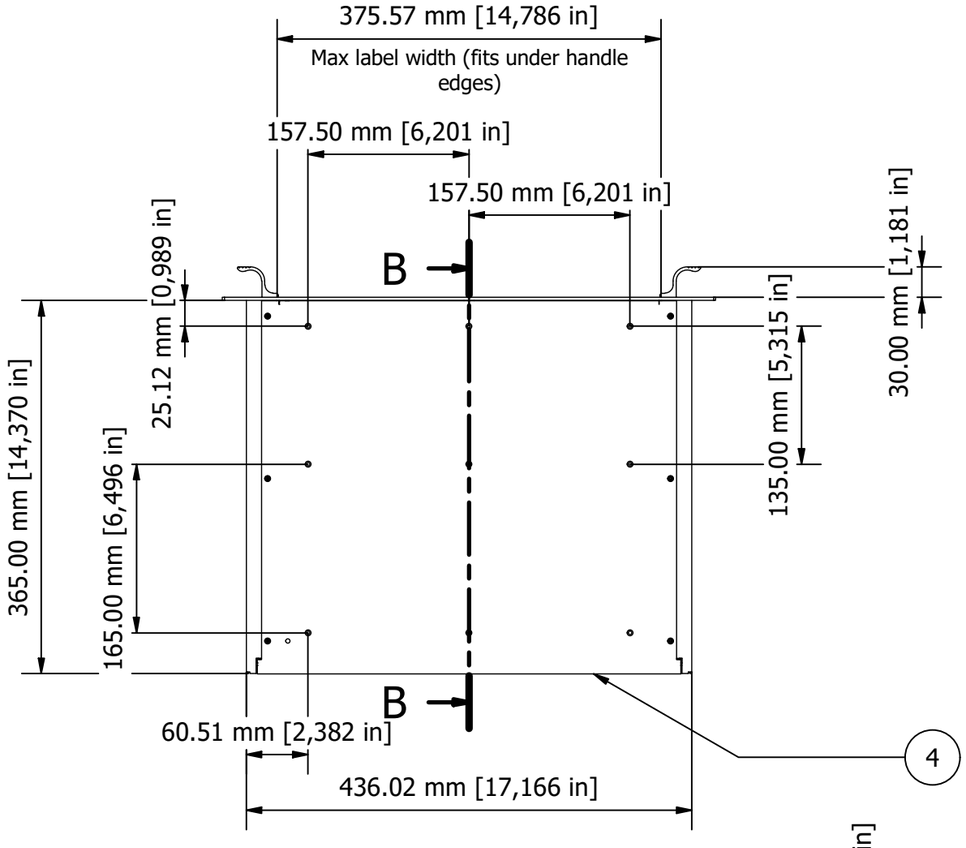

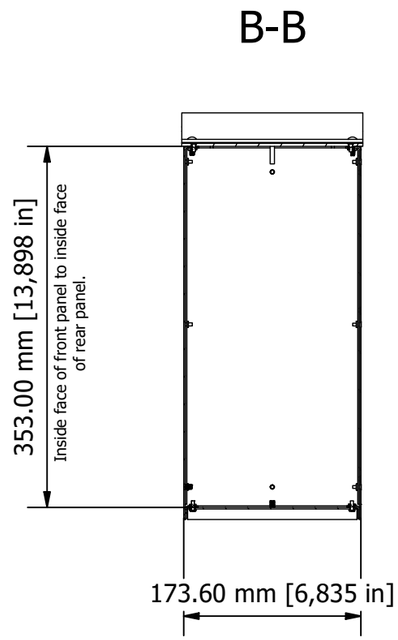

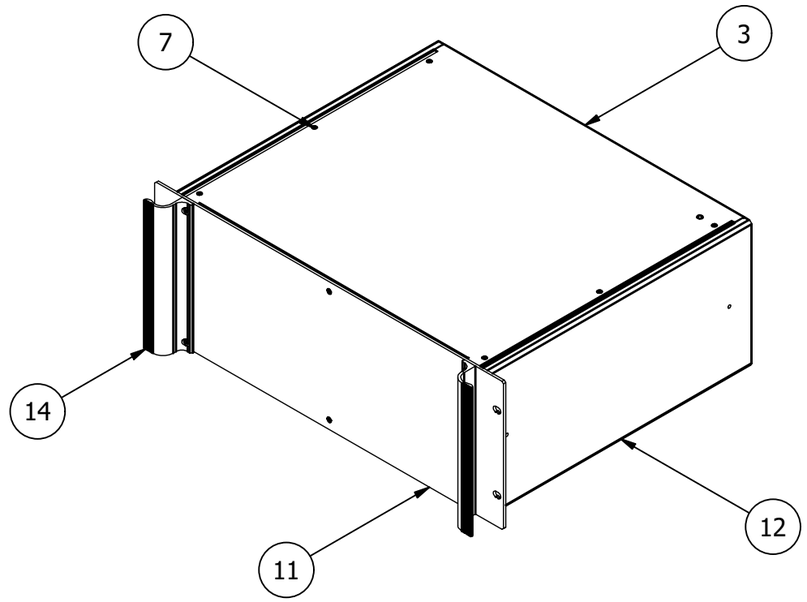

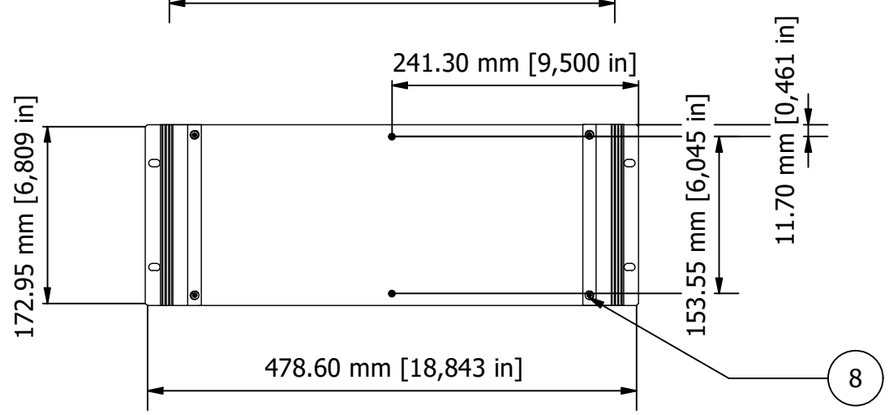

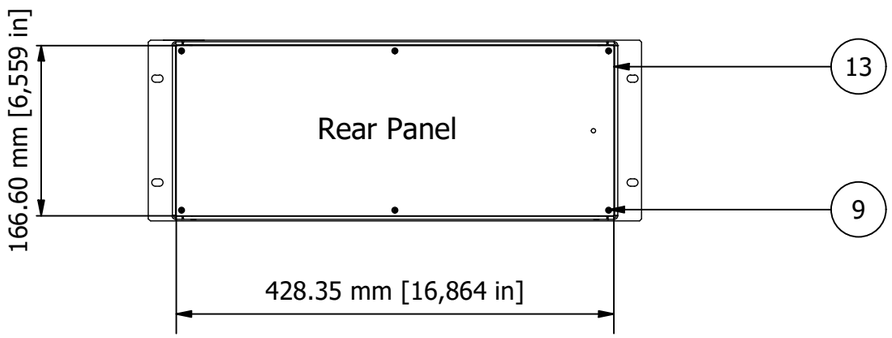

NOTES.

Case metalwork is made from 1.5 mm aluminium and painted RAL 7035 fine texture light grey.
Front panel is made from 3 mm aluminium with a clear etch & anodise finish.
Handles made from an aluminium extrusion & painted RAL 7035 fine texture light grey.
All parts are fitted with M4 studs for earth use.

PARTS LIST

ITEM	QTY	PART NUMBER	DESCRIPTION
3	1	M6203075	Top Cover
4	1	M6203055	Base Panel
7	14	M3x8 CSK Screw	Assembly Screws
8	4	M4x16 Screw	Front Panel Screws
9	6	M3x8 Pan Screw	Rear Panel Screws
11	1	M6219040	Front Panel
12	2	M6202455	Side Panels
13	1	M6201045	Rear Panel
14	2	M6200405	Handles

FIRST ANGLE PROJECTION

Designed by	Description	Date	Scale
L Clark	Combimet 4U x 19" x 365 mm Unvented	03/02/2022	1:6

METCASE ENCLOSURES
15 Brunel Way, Segensworth East, Fareham, Hampshire, PO15 5TX, UK.
Tel: +44 (0)1489 583858 Email: metcase@okw.co.uk

METcase www.metcase.com

Part Number	Issue	Sheet
M6219455	2	1 / 1