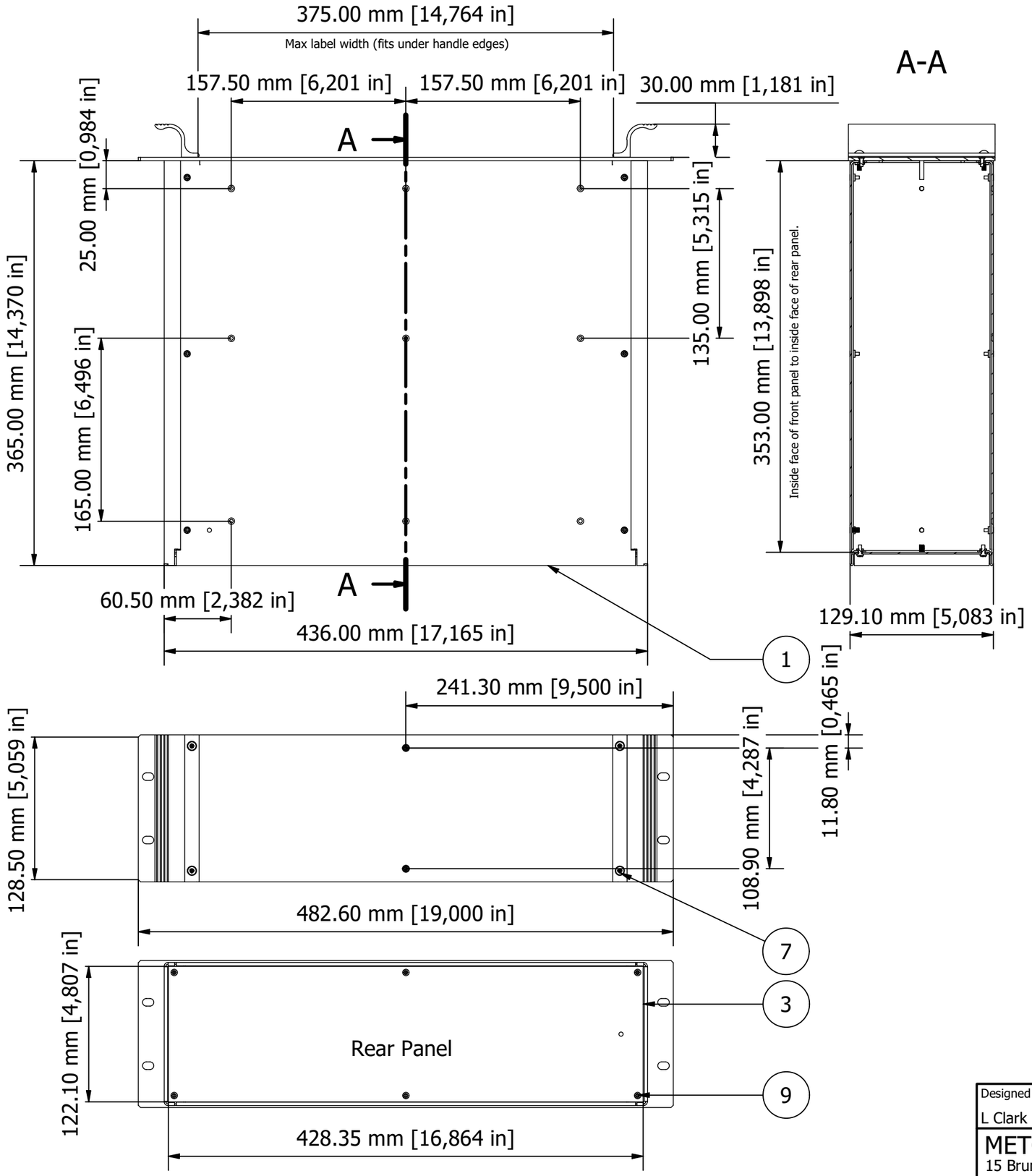

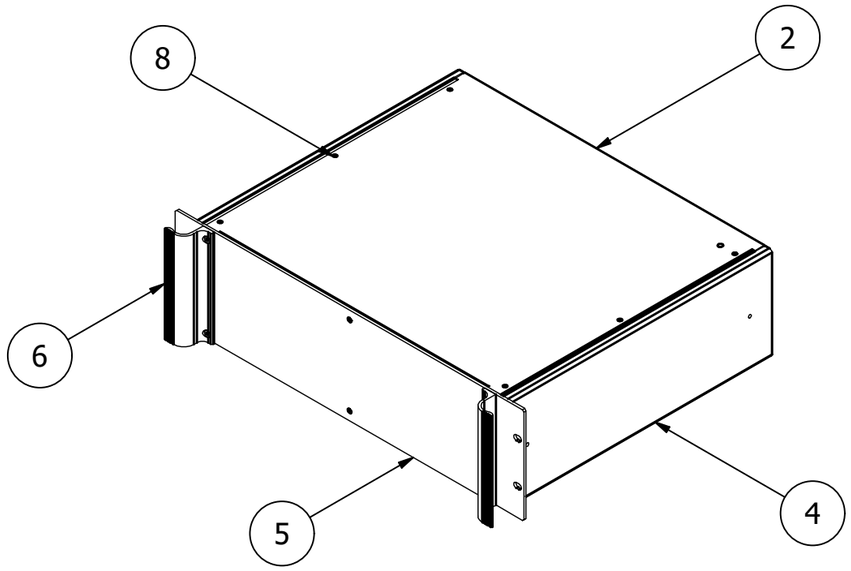

NOTES.
Case metalwork is made from 1.5 mm aluminium and painted RAL 7035 fine texture light grey.
Front panel is made from 3 mm aluminium with a clear etch & anodise finish.
Handles made from an aluminium extrusion & painted RAL 7035 fine texture light grey.
All parts are fitted with M4 studs for earth use.

PARTS LIST

ITEM	QTY	PART NUMBER	DESCRIPTION
1	1	M6203055	Base Panel
2	1	M6203075	Top Cover
3	1	M6201035	Rear Panel
4	2	M6202355	Sides
5	1	M6219030	Front Panel
6	2	M6200305	Handles
7	4	M4x16 Screw	Front Panel Screws
8	14	M3x8 CSK Screw	Assembly Screws
9	6	M3x8 Pan Screw	Rear Panel Screws

FIRST ANGLE PROJECTION

Designed by	Description	Date	Scale
L Clark	Combimet 3U x 19" x 365 mm Unvented	03/02/2022	1:4

METCASE ENCLOSURES
15 Brunel Way, Segensworth East, Fareham, Hampshire, UK. PO15 5TX
Tel: +44 (0)1489 583858 Email: metcase@okw.co.uk

METcase www.metcase.com

Part Number	Issue	Sheet
M6219355	2	1 / 1

© OKW Enclosures Ltd (Date as shown). This drawing contains proprietary information of OKW Enclosures Ltd and is tendered subject to the following conditions. The information be retained in confidence, not be reproduced or copied, and not be used or incorporated in any product, unless permission is obtained in writing from OKW Enclosures Ltd.