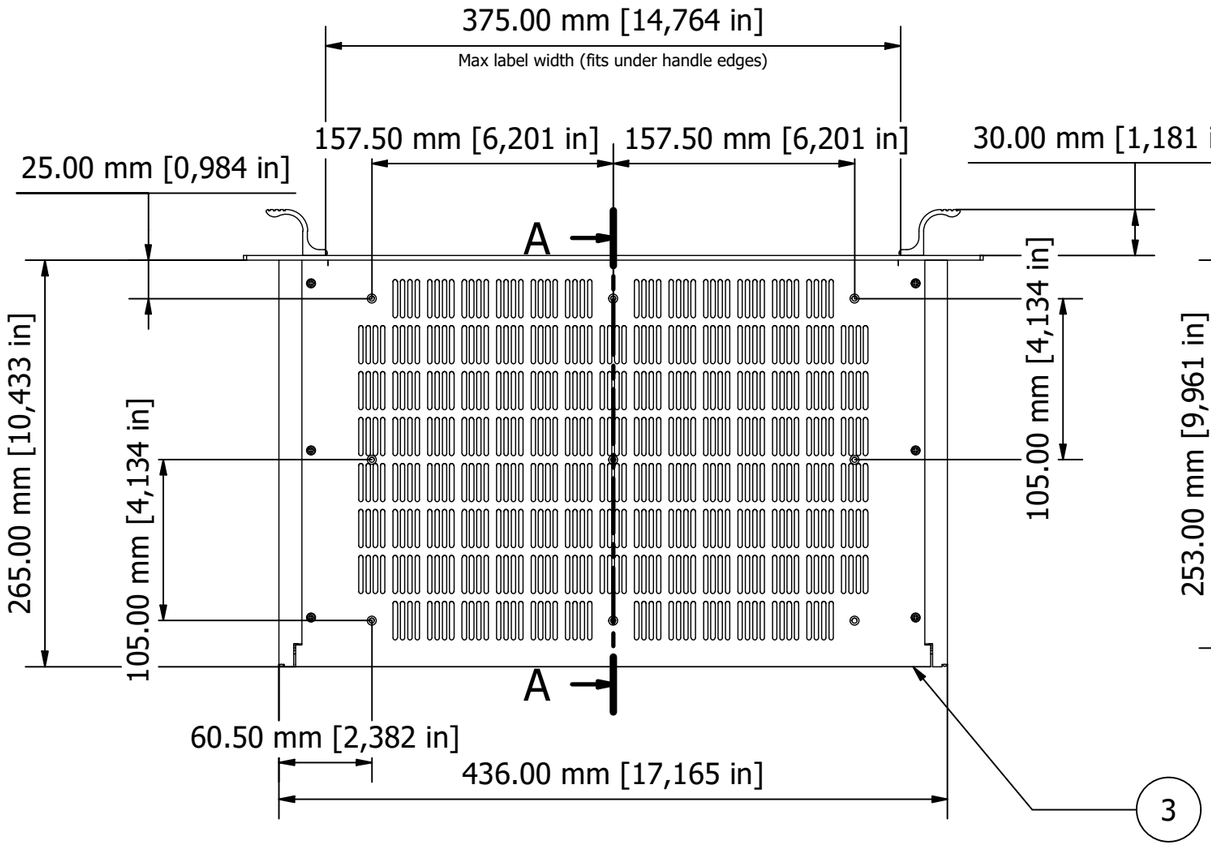

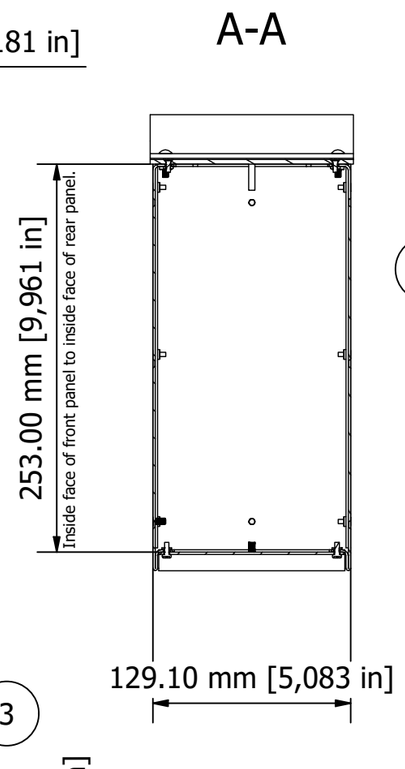

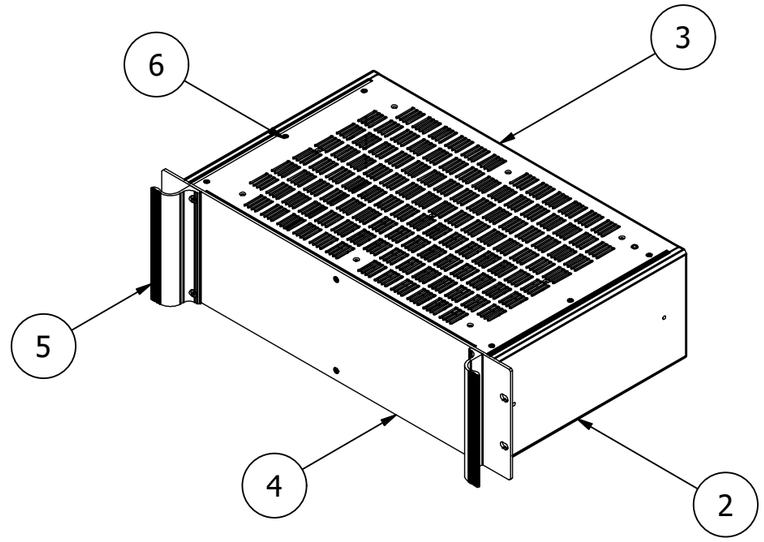

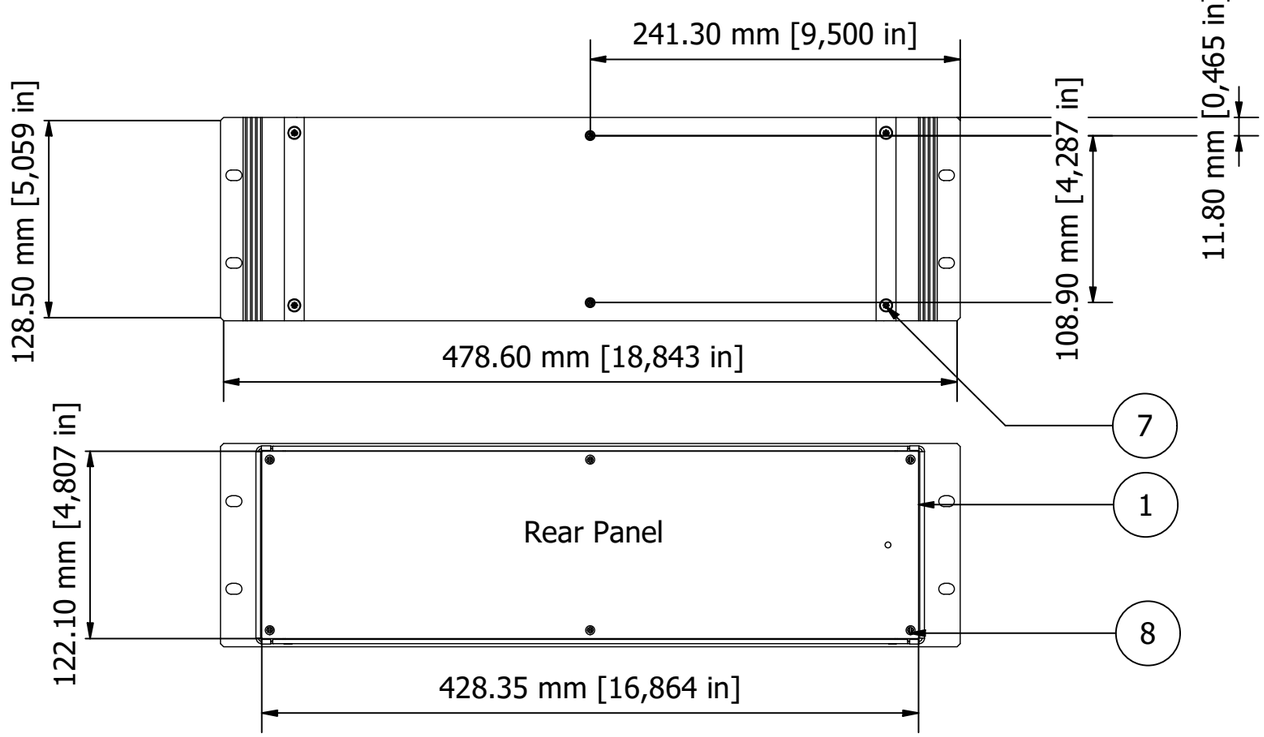

NOTES.
Case metalwork is made from 1.5 mm aluminium and painted RAL 7035 fine texture light grey.
Front panel is made from 3 mm aluminium with a clear etch & anodise finish.
Handles made from an aluminium extrusion & painted RAL 7035 fine texture light grey.
All parts are fitted with M4 studs for earth use.

PARTS LIST

ITEM	QTY	PART NUMBER	DESCRIPTION
1	1	M6201035	Rear Panel
2	2	M6202335	Side Panel
3	2	M6203045	Vented Covers
4	1	M6219030	Front Panel
5	2	M6200305	Handles
6	14	M3x8 CSK Screw	Assembly Screws
7	4	M4x16 Screw	Front Panel Screws
8	6	M3x8 Pan Screw	Rear Panel Screws

FIRST ANGLE PROJECTION

Designed by	Description	Date	Scale
L Clark	Combimet 3U x 19" x 265 mm Vented	03/02/2022	1:4

METCASE ENCLOSURES
15 Brunel Way, Segensworth East, Fareham, Hampshire, UK. PO15 5TX
Tel: +44 (0)1489 583858 Email: metcase@okw.co.uk

METcase www.metcase.com

Part Number	Issue	Sheet
M6219345	2	1 / 1